ALSLT SERIES UV STERILIZER INSTRUCTIONS

Effective 2/25



Please read all instructions before installing and using this unit

©2025 Aqua Logic, Inc., 2806 Gray Fox Rd. Monroe, NC 28110
Ph: 704.774.1391 email: info@aqualogicinc.com website: www.aqualogicinc.com

IMPORTANT SAFETY INSTRUCTIONS

WARNING:
To guard against injury, basic safety precautions should be observed including the following:

DO:

- Read and follow all safety instructions on unit and in these instructions.
- Save these instructions.
- Take special care to avoid possible electrical shock since water is employed in the use of this equipment.
- Use a ground fault interrupter (GFI) on all electrical equipment used near water.
- Carefully examine this unit after installation. It should not be plugged in if there is water on parts not intended to be wet.
- Immediately unplug the sterilizer if it shows any signs of leakage.
- Make sure unit is mounted securely before operating it.
- Always unplug unit when not in use, before taking off or installing any parts and before cleaning.

DO **NOT:**

- ***DO NOT REACH FOR THE*** STERILIZER if it falls into the water. Unplug it and then retrieve it.
- ***DO NOT*** attempt to use the equipment if it has been dropped into water.
- Do not operate this unit if it has a damaged cord or plug, if it is malfunctioning or if it has been dropped or been damaged in any manner.
- Never yank cord to pull plug from outlet. Grasp the plug and pull to disconnect.
- Do not attempt repairs on the unit except those listed in these instructions.
- Do not operate UV sterilizer for more than a minute or two without water running through it.
- **NEVER** allow eyes or skin to be directly exposed to the ultraviolet lamp rays--***severe burns may result!!!*** Always unplug unit when there is a possibility of direct exposure.
- Do not use indoor models in exterior applications unless they are well protected from the weather. Use pond models for exterior applications.
- Do not allow the unit to be exposed to freezing temperatures. Severe damage may result.
- Do not operate this unit if you suspect that the lamp or quartz sleeve may be broken inside. Be safe: remove and inspect lamp or sleeve if you are not sure.
- Do not attempt to change lamp or quartz sleeve without using appropriate safety gear.
- Do not exceed the maximum pressure rating of **30 psi**

DO NOT exceed this maximum water flow rating or serious damage may result.
High pressure units are available. Contact *AQUA LOGIC* for information.

Thank you for selecting an Aqua Logic ultraviolet (UV) sterilizer. Each model has been designed and built to provide years of reliable service and has been fully tested under pressure before it leaves the factory. Aqua Logic has been manufacturing UV sterilizers for nearly 25 years. Aqua Logic's UV sterilizers are in use by aquarists, aquaculture, public aquariums, educational institutions, government agencies, industry and research organizations across the US and around the world.

Aqua Logic offers free technical information by telephone (704.774.1391 M-F 8:30 am to 4 pm except selected holidays. Information is also available on the internet at our website (www.aqualogicinc.com) and by email: info@aqualogicinc.com.

The following should answer most of the questions that you may have about the installation, operation and use of your UV sterilizer:

- What benefits do I receive by using a UV sterilizer on my system?

  Aqua Logic UV sterilizers are highly recommended for both fresh and saltwater (marine) systems as well as ponds. They may be used to kill waterborne bacteria and viruses, to control algae and/or to kill fungi and protozoa (parasites).

  UV sterilizers do NOT affect water chemistry, lower the livestock's immune systems, nor affect established biological filtration systems.

- How do I know which size UV I need to do the job?

  See specification sizing chart provides maximum flow rates (in gallons per minute) to control typical bacteria and viruses, algae, and fungus/protozoa.

- How many hours per day should I use a UV on my system?

  We recommend that the UV sterilizer be placed in continuous operation for 24-hours-per-day 7-days-per-week after the biological filtration systems are established (typically about 4 weeks after starting or restarting a system).

- How often should I change the lamp?

  The average life expectancy of lamps in Aqua Logic UV sterilizers is almost a year of continuous operation. Even though the lamp may still be glowing with blue light after these time periods, the lamp probably no longer produces the kill-rate you desire.

- What are the maximum pressures that I can use on Aqua Logic UV sterilizers?

  All models may be used in applications up to a maximum of 35 psi.

  WARNING: Never use Aqua Logic UV sterilizers on systems which are connected to municipal water systems since the available pressure may exceed the maximum ratings of the equipment and serious damage or injury may result.

- Where should I put the UV sterilizer in my system?

  The UV sterilizer should be the last piece of equipment in your system before the water is returned to the tank.

- How do I connect the water inlet and outlet?

It doesn't make any difference which port you use for inlet or outlet. If you don't mount the unit on a level surface, make sure that the water goes in the lower port and out the higher port. This prevents air from being trapped in the unit.

- Can I mount the UV vertically?

  Yes. All models may be installed vertically.

- Can I mount the UV vertically?

  No. All models should be installed horizontal with the unions pointed up to stop trapped air.

  WARNING: Never allow any UV sterilizer to be exposed to freezing temperature. Allowing the unit to be exposed to freezing temperatures may result in breakage to the lamp, the quartz sleeve or to the PVC chamber.

  Damage to the unit caused by freezing is not covered under warranty.

Unit Installation:

- Shut off or unplug pump which will drive UV sterilizer.
- Connect water from pumping source to either one of the ports on the UV [if mounting UV in a vertical position, this port must be at the bottom of the unit]. The UV should be installed after all other system components to minimize the accumulation of organics within the UV sterilizer. You may use either flexible tubing or rigid pipe.
- Do not exceed the maximum flow rate for your unit as shown on the specification sheet.
- Connect the output from the UV to the return line to your tank.
- Turn on or plug in the pump.
- Carefully inspect the installation for leaks.
- Plug ballast into an available Ground Fault Interrupt (GFI) protected outlet.
  NOTE: Make sure that ballast and outlet are protected from possible leaks and water drips. Make sure that the power cord between the UV and the ballast has a loop in it below the ballast to prevent water from following the cord into the ballast and outlet.
- Look through the view port on the rubber end plugs to see if the lamp is glowing with a blue color.
- Your UV sterilizer is now installed and operational.

1 Month Scheduled Maintenance (all models):

- Look through the view port at the rubber end plugs on both sides to see if the lamp is glowing a bluish color.
- Carefully inspect the UV and plumbing for leaks.

1 Year Scheduled Maintenance:

- Replace lamp.

Maintenance as Required (all models):

- Replace quartz sleeve.

Remove organics from quartz sleeve

. **Replace Lamp in all Models**

WARNING: Be sure to wear protective gear for your hands and eyes!!

- Turn off or unplug pump.
- Unplug UV ballast from outlet.
- Remove both rubber end plugs from UV sterilizer by carefully pulling on ballast wire.
- Carefully slide UV lamp from quartz sleeves just enough to expose the white lamp socket.
- Hold the lamp socket with one hand and with the other hand hold the lamp. Carefully pull apart the connector from the lamp.
- Remove lamp by sliding it out of the unit.
- Slide replacement lamp into the quartz sleeve. [DO NOT force the lamp into the sleeve or you may break the quartz sleeve! We recommend using Aqua Logic certified lamps for a perfect fit.]
- Attach the lamp socket to the new lamp and carefully slide the lamp in to position where the rubber cover plugs seat correctly.
- Turn on or plug in the pump.
- Carefully inspect for leaks.
- Plug UV sterilizer ballast into the outlet.
- The view port should show a blue light after a few seconds.

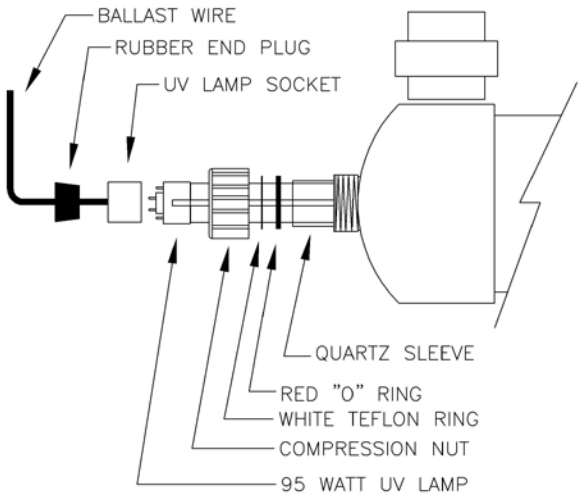

Replacing the quartz O-rings and/or quartz sleeve [See Drawing]

WARNING: Be sure to wear protective gear for your hands and eyes!!

- Turn off or unplug the pump.
- Unplug the UV ballast.
- Isolate or remove UV from the system.
- Drain the water from the unit.
- Disconnect and remove UV lamp from quartz sleeves. (use instructions from above)
- Remove the compression nuts on each end of the UV. [NOTE: Some water may leak out during this procedure.] If you cannot loosen them by hand, you may obtain a UV lamp removal wrench from your distributor or from Aqua Logic Systems or use a pair of adjustable spanner pliers.
- Remove both red O-rings and Teflon rings.
- Carefully slide the quartz sleeve from the chamber in the same manner as removing the lamp.
- If you are not replacing the O-rings with them, inspect them carefully for damage or cracks.
- Carefully slide the new or cleaned sleeve back into the chamber until it is approximately centered in the sterilizer.
- Slide the red O-rings and Teflon rings onto the sleeve and snug them evenly against their seats.
- Screw the compression nuts back on. Hand tighten only. Do **NOT** over-tighten.
- Reinstall the UV lamp and reconnect the lamp sockets with the rubber end plug snuggly in place.
- Reconnect the UV to the plumbing.
- Turn on or plug in the pump.
- Inspect carefully for leaks.
- Plug UV ballast into its outlet.
- After a few seconds, the view port should glow with a blue color.

©2025 Aqua Logic, Inc., 2806 Gray Fox Rd. Monroe, NC 28110
Ph: 704.774.1391 email: info@aqualogicinc.com website: www.aqualogicinc.com

Other Maintenance:

Replace the ballast (all models):

- Turn off or unplug pump.
- Unplug UV ballast.
- Remove both rubber end plugs from UV sterilizer by light pulling on the ballast cord.
- Disconnect ballast and lamp socket from UV lamp.
- Install new ballast with rubber end plugs and lamp sockets.
- Turn on or plug in the pump.
- Plug UV ballast into its outlet.
- After a few seconds, the view port should glow with a blue color.

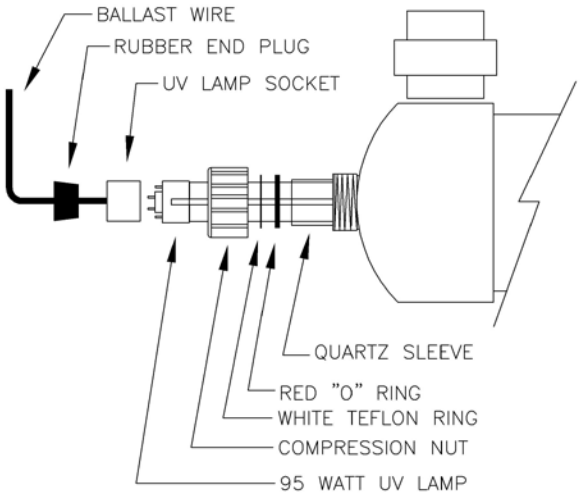

Parts Listing:

All replacement parts are available directly from Aqua Logic, Inc.

Catalog number	
	Bulbs:
UV-BULB-095W-1	95 Watt Bulb
	Ballast:
UV-BAL-95W-1	ALSLTB-2 Potted ballast
	Quartz Sleeve:
UV-QTZ-Q95T	Test tube quartz sleeves
	Miscellaneous:
UV-PLUG-ASSY-3	Replacement UV bulb plug assembly
UV-OR-SIL-RED	8820-200-326 Quartz red O ring
UV-OR-SPLIT	MIC001PGRR001 Spilt PTFE “O” Ring
UV-COMP-COUP-1.25-AL-NUT	1-1/4” Compression Nut
FT-R-PLUG-000-1	Plug, tapered rubber grommet

REMOVING ORGANICS FROM THE UV WITHOUT REMOVING THE QUARTZ SLEEVE:

WARNING: Be sure to wear protective gear for your hands and eyes!!



- Unplug UV from wall socket.
- Isolate UV from main plumbing and drain the unit.
- Make a pure chlorine bleach solution (1 cup bleach to 1 quart water)
- Connect the flush kit hoses to the drain and air bleed of the UV sterilizer.
- Cycle the solution through the UV sterilizer for 5-10 minutes.
- Drain the bleach solution from the UV sterilizer.
- Rinse or flush the unit thoroughly to remove all chlorine. Continue to flush until you can no longer smell chlorine. You may wish to add a few drops of a de-chlorinator to insure that all chlorine has been neutralized.
- Reconnect the UV to the plumbing.
- Apply power to pump and open-air bleed to release trapped air in the UV chamber. Check the system carefully for leaks.
- Apply power to UV sterilizer.
- The view port should show a blue light after a few seconds.

REMOVING MINERAL DEPOSITS FROM THE UV:

WARNING: Be sure to wear protective gloves and goggles!!

DO NOT COMBINE chlorine bleach with muriatic acid or equivalent. The resultant gases may be poisonous.

Follow the procedure as above except that you use muriatic acid or equivalent. Be sure to follow product instructions carefully.

©2025 Aqua Logic, Inc., 2806 Gray Fox Rd. Monroe, NC 28110
Ph: 704.774.1391 email: info@aqualogicinc.com website: www.aqualogicinc.com

Limited Warranty Terms (PLEASE READ CAREFULLY):

All UV Sterilizers manufactured by ***AQUA LOGIC, INC.*** (hereafter called ***AQUA LOGIC***) are warranted against defects and workmanship for a period of one (1) year from the date of purchase by the original purchaser/end user or eighteen (14) months after date of manufacture (whichever is sooner). Any ***AQUA LOGIC*** product found to be defective within the warranty period will repaired or replaced at the option of ***AQUA LOGIC***.

Warranty **EXCEPTIONS**:

- All UV Sterilizer chambers are warranted for life against leakage caused by UV degradation.
- Light lamps (including ultraviolet sterilizer lamps) are warranted for a period of ninety (90) days from date of purchase.
- The warranty applies only to the original end user and is not transferable.
- The limited warranty may not be modified by verbal statements by the manufacturer, distributors, retailers, their agents nor any other party.
- The warranty covers only the repair or replacement of the ***AQUA LOGIC*** product. ***AQUA LOGIC*** denies all liability for any other loss including but not limited to loss of equipment, income, livestock or personal injury.
- ***AQUA LOGIC*** does not warrant the suitability of the product for the end user's application.
- All warranties are void by the following:
  --Product labels defaced or removed.
  --Product improperly installed or maintained by user or their agent.
  --Product abused, misused, or damaged by user.
  --Product misapplied to application.
  --Product damage caused by electrical surges, spikes, brownouts or improper voltage.
  --Product damage caused by freezing, extremely cold or extremely high temperatures.
- ***AQUA LOGIC*** shall not be liable for the cost of field repairs, inspection, installation, replacement, etc., without prior written authorization and/or valid authorization number.
- ***AQUA LOGIC*** shall not be liable for shipping damage or loss.
- ***AQUA LOGIC*** shall not be liable for unauthorized shipping costs to return warranty items to ***AQUA LOGIC.***

ALSLT-95 THRU 190-8 UV STERILIZERS

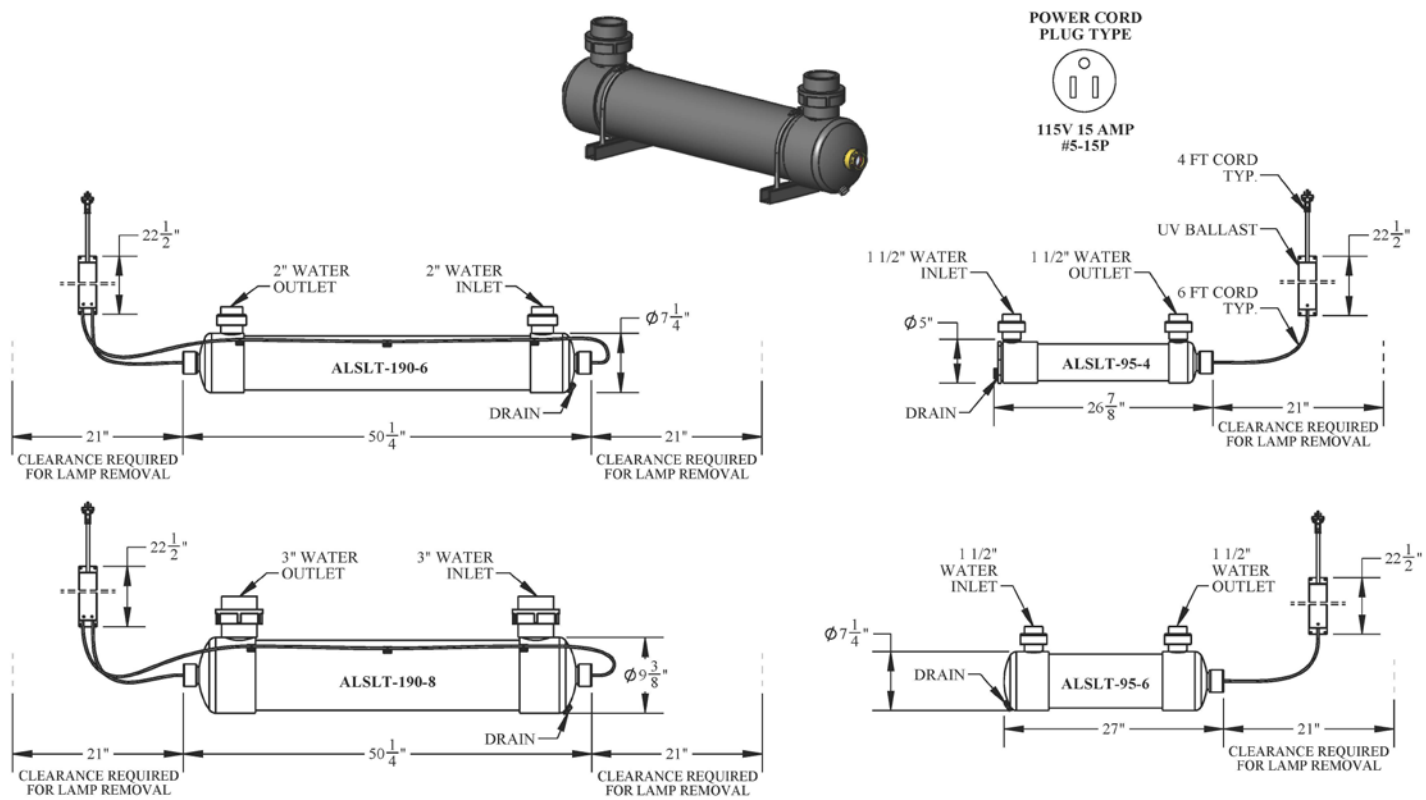

ALSLT UV STERILIZER SPECIFICATIONS										
MODEL NO.	LAMP / WATTS	VOLTS	AMPS/ WATTS	*WATER INLET / OUTLET	MAXIMUM WATER FLOW RATE (GPM) AT UV INTENSITY µWsec/cm2 @ 90% TRANSMISSIBLITY85% AT END OF LAMP LIFE					OPTIONAL FIBERGLASS MOUNTING BRACKET PART NO.
					30K	45K	60K	90K	120K	
ALSLT-95-4	1 / 95	115	.9 / 104	1-1/2" FPT	25	17	13	8	6	UV-MB-4
ALSLT-95-6	1 / 95	115	.9 / 104	1-1/2" UNION	35	23	18	12	9	UV-MB-6
ALSLT-190-6	2 / 190	115	1.8 / 207	2" UNION	70	46	36	24	18	UV-MB-6
ALSLT-190-8	2 / 190	115	1.8 / 207	3" UNION	110	73	55	36	28	UV-MB-8

NOTE:
· SHADED AREAS HAVE WATER VELOCITIES GREATER THAN 5FT / SEC.
*ALL DIMENSIONS ARE APPROXIMATE AND CAN CHANGE AT ANY TIME.
· MAXIMUM WORKING PRESSURE FOR ALL UNITS IS 35 PSI.

OPTIONAL:
FIBERGLASS MOUNTING BRACKET (SEE TABLE FOR PART NUMBER).

REPLACE UV LAMP EVERY 11 MONTHS

REPLACEMENT UV LAMP PART#: UV-BULB-095W-1

aqua LOGIC
Aquatic Design, Manufacturing & Integration
2806 Gray Fox Rd.
Monroe, NC 28110

* COPYRIGHT *
These drawings including design idea and construction techniques herein are the sole property of Aqua Logic Inc. They shall not be revised, copied, or reproduced in any manner without the written consent of Aqua Logic Inc.

DESCRIPTION	DRAWING #	SHEET TITLE
AQUA LOGIC ULTRAVIOLET STERILIZERS	PDF-0062	ALSLT-95 THRU 190-8 UV STERILIZERS

DRAWN BY	DATE	REVISION	SCALE	SHEET #
Arnaldo Guzman	2/21/2023	2/13/2025 CE		1 OF 1

aqua LOGIC
Aquatic Design
Manufacturing & Integration

©2025 Aqua Logic, Inc., 2806 Gray Fox Rd. Monroe, NC 28110
Ph: 704.774.1391 email: info@aqualogicinc.com website: www.aqualogicinc.com

©2025 Aqua Logic, Inc., 2806 Gray Fox Rd. Monroe, NC 28110
Ph: 704.774.1391 email: info@aqualogicinc.com website: www.aqualogicinc.com